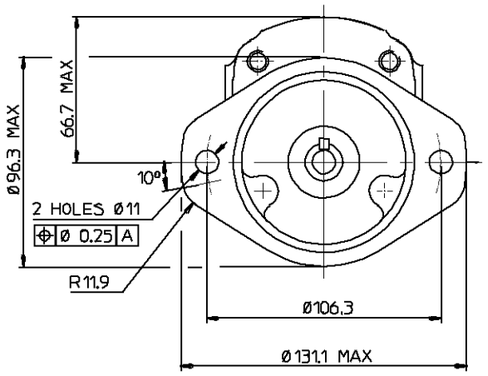

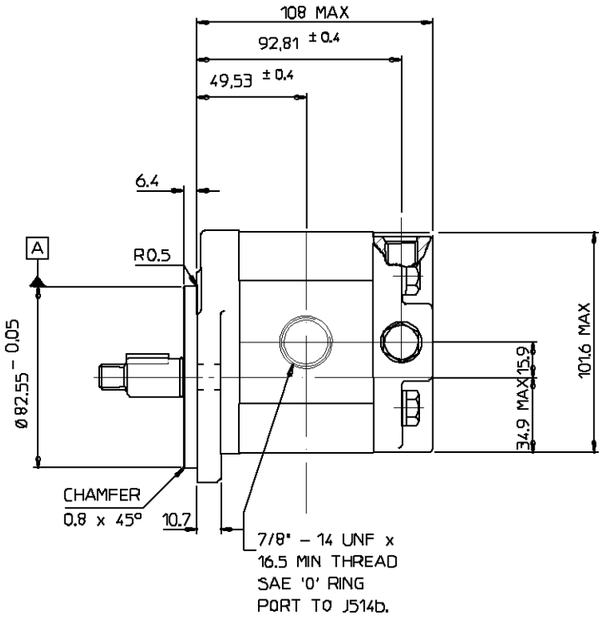

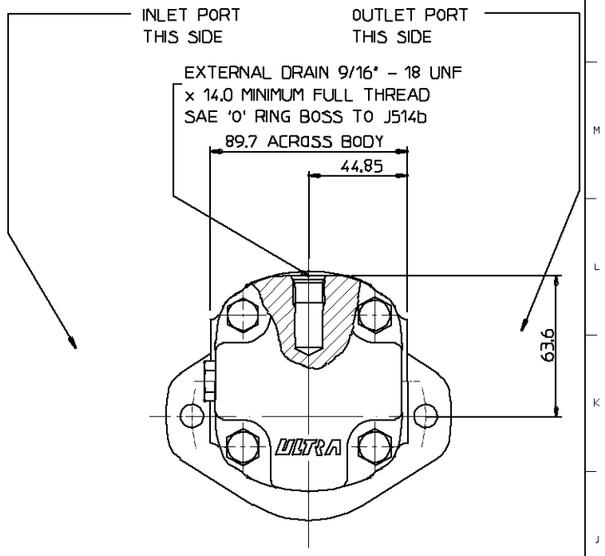

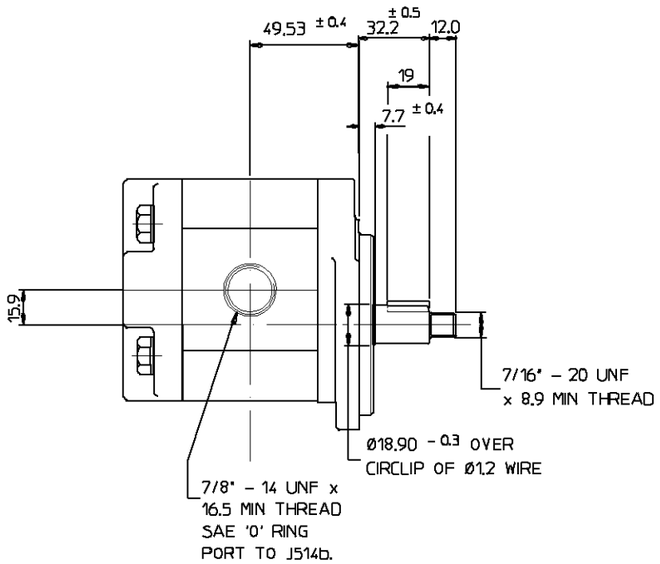

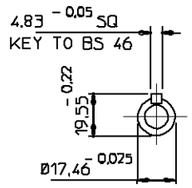

MOTOR DATA	
MOTOR TYPE	1MR130
THEORETICAL DISPLACEMENT	13.0 cc/rev (0.79 cu in/rev)
TYPICAL RUNNING TORQUE AT PRESSURE P1	TO BE ADVISED
MAXIMUM CONTINUOUS PRESSURE P1	195 bar (2828 psi)
MAXIMUM SPEED AT PRESSURE P1	3500 rev/min
MINIMUM SPEED AT PRESSURE P1	300 rev/min
ROTATION WHEN VIEWED ON END OF DRIVESHAFT	CLOCKWISE
APPROX WEIGHT	kg (lb)
OPERATING TEMPERATURE RANGE	CONTINUOUS 0°C TO 80°C COLD START −20°C MAX INTERMITTENT 100°C
SHAFT SEAL TYPE	MEDIUM PRESSURE
MAX SHAFT SEAL / DRAIN LINE PRESSURE	CONTINUOUS 10 bar INTERMITTENT 17 bar

FOR OPERATING CONDITIONS OUTSIDE THOSE STATED PLEASE CONSULT ULTRA HYDRAULICS LIMITED TECHNICAL SALES DEPARTMENT.

ISSUE No.	1
ISSUED ON	AU70551
DRAWN	AM
DATE	23-Oct-00
CHECKED	AM
ENG APP.	AM
PROD APP.	——

USED ON PR5538
UNIT No.
ASSY No.

Part No. 6 1 8 4 M

THIRD ANGLE PROJECTION

TITLE
1MR130J2J2B1B1-195-MA-CP1S1M-E2N1

UNLESS OTHERWISE STATED
ALL DIMENSIONS IN MILLIMETRES / INCHES.
GENERAL MANUFACTURING STANDARDS TO HDS 200
GEOMETRIC TOLERANCES and SYMBOLS TO BS 308.

© ULTRA HYDRAULICS LTD 1999 THIS DRAWING IS THE PROPERTY OF ULTRA HYDRAULICS LIMITED AND IS CONFIDENTIAL. IT IS ISSUED SUBJECT TO THE CONDITIONS THAT :-
(1) INFORMATION OR ANY PART CONTAINED IN IT SHALL NOT BE DISCLOSED IN ANY FORM TO A THIRD PARTY.
(2) IT OR ANY PART OF IT SHALL NOT BE REPRODUCED IN ANY FORM.

ULTRA HYDRAULICS LTD. CHELTENHAM

SIZE A0